RTTY Journal

APRIL 1983

VOLUME 31 NO. 4 EXCLUSIVELY AMATEUR RADIOTELETYPE ONE DOLLAR

5Z4RT AND FRIENDS--SEE DX COLUMN FOR PARTICULARS

CONTENTS

RTTY THEORY AND APPLICATIONS PART II

PACKET RADIO PART II

RTTY JOURNAL

DEE CRUMPTON, N6ELP formerly KA6NYW
OWNER-EDITOR
POST OFFICE BOX RY
CARDIFF-BY-THE-SEA, CA 92007

JOHN P. GOHEEN, KA6NYK
ASSOCIATE EDITOR

BUSINESS OFFICE
1155 ARDEN DRIVE
ENCINITAS, CA 92024
TELE: 619-753-5647

POSTMASTER SEND FORM 3579 TO:
POB 179, CARDIFF, CA 92007

SUBSCRIPTION RATES

USA	$ 7.00	PER YEAR
CANADA, MEXICO	7.50	" "
CANADA AIR MAIL	8.50	" "
MEXICO AIR MAIL	8.50	" "
FOREIGN	7.50	" "
FOREIGN AIR MAIL	13.50	" "

BACK ISSUES

A DUPLICATE OF ANY BACK ISSUE MAY BE OBTAINED FROM RED WILSON, 4011 CLEARVIEW DRIVE, CEDAR FALLS, IA 50613. $1.00 PPD & SASE.REPRINTS OF ALL (2) UART ARTICLES $2.00PPD.

MANAGERS

JEAN HURTAUD, F8XT
CHILLAC
16480 BROSSAC, FRANCE

DR. ARTHUR GEE, G2UK
21 ROMANY ROAD,OULTON BROAD
LOWESTOFT,SUFFOLK
NR32 3PJ, ENGLAND

KANJI YAMAMURA, JH2FHX
2-42 UMENOKI, IZUMI-MACHI
TOKI-CITY, GIFU-PREF
JAPAN MAIL NO. 509-51

THE PUBLISHER ASSUMES NO RESPONSIBILITY FOR ERRORS, OMISSIONS AND ASSUMES NO LIABILITY FOR SUCH. REPRODUCTION OF THIS MAZAZINE MUST BE ACCOMPANIED BY CREDIT TO THE JOURNAL AND THE AUTHOR. THE RTTY JOURNAL IS PUBLISHED 10 TIMES PER YEAR WITH MAY/JUNE AND JULY/AUGUST COMBINED. PUBLICATION WILL BE ON OR ABOUT THE 20TH OF THE MONTH. SUBSCRIPTIONS AND ADS MUST BE PAID FOR BY CASH, CHECK OR MONEY ORDER IN UNITED STATES FUNDS ONLY.

DX RTTY

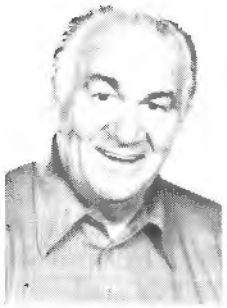

"HEARD ISLAND ON CW"

BY BILL

WØLHS SNYDER, 1514 S. 12th Street, Fargo, ND 58103

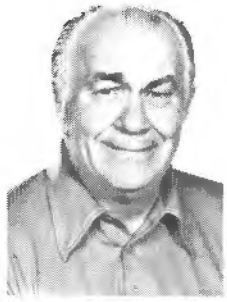

"HEARD ISLAND ON RTTY"

The second annual RTTY WORLD CHAMPIONSHIP, held in February, was a lot of fun for all those who took part. Band conditions, which had deteriorated during the week previous, suddenly perked up and DX was really fun again. The solar flux numbers were low, but so were the geomagnetic indicies; and for the high latitudes, this was just great. The one-day format took the drugery out of contesting; so you didn't have to knock yourself out for the whole weekend to participate.

Every RTTY contest gives us a chance to renew friendships with keyboard kut-ups all over the world, and the temptation to rag chew adds a lot of fun to the competition. If you have not participated in an RTTY contest, I urge you to try your luck. The 73-RTTY JOURNAL test brought out some rare ones (most of which I missed because I got to shooting the breeze with other contestants.) HZ1AB made an appearance, as did XT2AU, from Upper Volta. Enno who was the really big attraction during the early hours of the contest. Enno had a consistently big signal, and he took care of all those who needed the country. I heard him give number 63 after only three hours of operation.

K8ZVO marked up these DX stations in the contest: HZ1AB, XT2AU, A22BW, and C53EE. Those alone are enough to make any contestant jump for joy!

K6WZ, Carl, writes that he scored two new ones in the contest: 5Z4DA and XT2AU. Carl would like to know how to pronounce OUGADOUGOU, the QTH for the XT station. Any help?

Well, there you have the good DX news--now for the bad! The Heard Island Dxpedition was not quite so lucky. Band conditions were really bad. To my knowledge, only one USA station worked Heard Island on RTTY. The lucky fellow was W8JIN, Jim, who snagged VKØSJ on 20 meters at 0400Z on February 14th. Jim also reports hearing/working 9K2KA, YB2BLI, YB3ON, and 5N3AFG on 21 MHz. plus FRØGGL at 0340Z on 14 MHz.

Only a very few European stations managed to contact Jim Smith and his Heard Island party. F8XT, JEAN, was one of the lucky ones. Others were ON4UN, ON4BX, IØAOF. Reports from Japan indicate that a few JA stations contacted the DXpo, but not too many other countries made the grade. Personally, I only heard VKØSJ on CW and very weak both times.

ON4UN, John, told of his contact with VKØJS;"Jim Smith was heard here on RTTY one day only. I was number 2 or 3 to work him, got 579. He made maybe 15 QSO's and that was the only time he was heard on RTTY....I was especially glad to work him on 80 meter CW, one of the two Europeans he worked." (John is the author of a book on 80 meter DXing.) That QSO brought John's 80 meter standing to 306!

Other recent RTTY contacts by ON4UN are TN8CC, 8P6PC in Barbados, A92DM in Bahrain, 5T5TO in Mauritania, and CEØCBG/z. John has also made his last county in the USA for a total of 3077 on SSB. Congratulations!

F8XT, Jean, besides reveling after working with Heard, tells of TN8CC being active from Brazzaville. He can be QSL'd via F5JT. According to Jean, SVØBE, with K7IUW as operator, appeared on 15MHz around 1430Z. Jean says he had a good long QSO with SVØBE who is using only a whip antenna to transmit. He has sucessfully worked a number of USA stations, but his rig has a problem in that it will only operate on the wrong side band, so he is running up-side down. He has now shipped the rig back to the States, and should have it back in a month or so.

Another in the F8XT log is FRØGGL from Reunion Island. Jean also indicates that 7X4MD's has renewed his activity on RTTY after an absence of a couple of years. C31JC is operating regularly again according to F8XT.

W6MI, Al, Says FRØGGL responded to his QSL pronto fashion, but AL has been unable to obtain any cards from either HC or YV. (You are certainly not alone, AL.) TI2DO has sent 5 cards to one HC station, and still no answer.

KØJH, Jerry, who spends a lot of time at sea, reports 7X4MD at 21090 1645Z time. Jerry also raves about his new 930S rig. You're not alone, Jerry, so does W3KV, John and this old timer.

K7BV, Mac, reports working J6LOV, Errol, on Santa Lucia in the Windward Islands at 2000Z. Errol is a permanent resident of the island and can be QSL'd either direct (83 callbook) or via K2QIE. Mac has been stalking TN8CC also, and tells us that the Congo station is active on weekends.

KA5CQJ, Camille, worked TN8CC at 2300Z on 20 meters; and T32AB, Lamarr on 15 at about 0030Z.

EAVESDROPPINGS: "expedience is the

MESSAGE PROCESSOR TERMINAL

MPT3100

Message processing is now available for radio communications systems. The MPT3100 is a complete up-date of the popular HAL DS3100 RTTY terminal, adding the ability to store RTTY messages, edit them, and retransmit them singly or in preset groups. ALL of the previous features of the DS3100 and MSO3100 are retained and new mailbox commands are included. The editor may be used with any file that is stored. The MPT3100 includes ASR (Auto Send-Receive), MSO (Message Storage Option - "mailbox"), and TRO (Traffic Relay Option) modes. The MPT3100 is a new software package that works in ANY DS3100 with MSO3100 circuit board. Some of the features of the MPT3100 are:

NEW FEATURES OF MPT3100:

- Automatic storage of all received text in files separated by the standard "NNNN" terminator (TRO-REC mode)
- Full editing capability of all files stored by mailbox (MSO) or by TRO storage
- Editor allows insertion or deletion of text in any part of a stored message - 15 keyboard edit commands
- Editor may be used even while receiving, transmitting, or storing messages - even when MSO mailbox is in use
- Files may be renamed, created in the editor, cut into smaller files, and deleted with keyboard commands
- Message files may be transmitted singly or in batches
- Transmitted messages may be serial-numbered automatically
- The full format requirements for NAV MAR COR MARS NTP-8(A) are supported
- New TRO commands include: RXON, RXOFF, DIR, SEND, STOP, RESUME, RESTART, EDIT, CUT, CREATE, QUIT, RENAME, DELETE
- On-screen status indicators show: TRO mode; bytes of memory remaining; file names being recorded, transmitted, and edited
- MSO mailbox .SDIR directory command revised to shorten time required for transmission
- New .DIR [filematch] and .SDIR [filematch] mailbox commands give listing of only file names that include [filematch]
- Programmable "header ID" for each mailbox transmission

MSO Mailbox Features:

- Programmable MSO call-up command
- Mailbox may be controlled by external station to store message files, read files, delete files, and list the file directory
- DS3100 operator may perform all MSO operations on the keyboard without transmitting
- Mailbox transmissions include user-prompting and automatic CW and RTTY indentification
- HELP messages are provided to assist the new user in operation of the mailbox
- All mailbox messages stored may also be edited, renamed, and transmitted using TRO commands
- MSO commands are: .DELETE, .DIR, .DIR [filematch], .ENDFILE, .FILEHELP, .HELP, .KY1ON/OFF, .KY2ON/OFF, .PRINTON/OFF, .QBF, .READ, .RYS, .SDIR, .SDIR [filematch], .WRITE

DS3100ASR Terminal Features:

- Send and receive ASCII, Baudot, Morse codes
- ASCII or Baudot at 45, 50, 57, 74, 100, 110, 134, 150, 300, 600, 1200, 2400, 4800, and 9600 baud; full or half duplex
- Morse code at 1 to 175 wpm
- Full length 72 character line / 24 line screen display.
- 50 line pre-type on-screen transmit buffer
- True "ASR" operation - pretype transmit text while receiving
- 150 line receive display buffer
- MSO 3100 adds 32K bytes of additional storage
- 12 inch, P31 green display built-in
- Control functions are clearly marked on keytop
- On-screen status indicators with real-time indication
- Upper-lower case ASCII with ALL control codes
- Current loop or RS232 RTTY input/output
- Positive and negative Morse key outputs
- ASCII printer output prints Baudot, Morse, or ASCII text
- Operates on 105-130 / 210-250 VAC 50-400 Hz power

WHEN OUR CUSTOMERS TALK, WE LISTEN – and we have been listening. Rather than making a proven product obsolete – a product that is well known and respected for its reliability and capabilities – HAL has completely rewritten the software of the DS3100 to offer the features that our communications customers have been asking for. A full year in the preparation, these are features that could only be designed by people who know and operate RTTY. Best of all, ANY DS3100 can be modified at the factory to include the MPT3100! In marked comparison to other radio equipment that is made obsolete by new models every 6 to 12 months, the DS3100 lives on – a full 4 years after its announcement.

HAL COMMUNICATIONS CORP.
BOX 365
URBANA, ILLINOIS 61801

If you are really serious about your RTTY, look to HAL, your REAL RTTY company.

Please write for even more details about the MPT3100 Message Processor Terminal. Call your dealer or HAL for prices and how to get a new MPT3100 or to arrange for modification of your present DS3100.

DX COLUMN CONTINUED

BEST TEACHER!"...."Every man to his own taste, said the farmer as he kissed a cow"...."Without lids we wouldn't be big shots (on CW)"...."I am still in the excitement stage of this new toy!"...."Like the capacitor said to the battery: I get a charge out of you."...."My memory is really bad, I forgot your call sign!"...."I feel guilty every time I use the keyboard for CW."...."There were five stations telling the rest that the frequency was in use."...."I'm a newcomer with two left hands."...."It took the Roman Empire 500 years to go broke, looks like we'll beat that record."...."The more tax money we send to Washington, the more rat holes they find to pour it down."...."I am legally blind, but use a magnifier.". ..."Please, only one station call at a time!"..."A Toyota is only a transistorized Rolls Royce."...."When's the last time you heard any MSO ask if the QRG is busy?"...."It is hard for me to write in the English lengwitch."...."Saw a bumper sign which said: 'Honk if you want herpes."..."So Cheeri-o-o-o-o-o-o-o-o-o-o-"...."I'm going to turn on the TV set and watch Olivia Newter John." [ED note:that could hurt.]

W3KV, John, sends news that he is recuperating from a bad fall in which he severly sprained his right wrist; sohis activity on RTTY has been somewhat curtailed. In commenting on Heard Island, John says the first pile-up heard in Europe was really a pirate in Africa, so there was some apprehension as to whether or not they worked the real Jim Smith.

John started using his new 930s with AFSK on the lower side band, but because he has the 500 Hz CW filters installed, he switched to FSK to take advantage of the filtration. Here are some of the heard/worked at W3KV: 5T5TO, 5Z4RT, 5N7HKR, GU4NYT, 8P6PC, TI2JFP, PP5YC, LU1HCE and YO7BI. Others are: TI2AEB, Armando; YS70B, Oscar; CE3FCF, Carlos; and 9Y4VU, Frank, who is QRV again after an absence of several years.

T43AMC is a special call for the Havana Radio Club station during World Communications Year. QSL via POB 1, Havana, Cuba.

A nice note from JA5TX. Mitsuo says he is having lots of fun on RTTY and now feels the same excitement he felt when he started ham radio 23 years. I think we all do Mitsuo.

While scanning the bands recently, I watched WB8YJF, Jon, in QSO with ZS6BVZ. Jon works at a job that many RTTY buffs would probably like: he tests the RTTY units turned out by irl. He sends along a list of some of those he has heard/worked from both his home address and work. Among them are: GI3TLE, LX1DA, ISØVSG, TU-2GA, PZ5AA, GW2HJC, TU2GA, 5T5TO, EA-8ZO, VP9GE and 9Y4VU. Jon says about DXing on RTTY and DXCC/WAS chasing: "seems strange that it is harder to talk to your own country than it is to get DX." Jon has nearly twice as many countries as he has states.

There is a lot of interest in Amtor, and since by the time you read this it will be a reality in the USA, more and more stations are talking it up on the bands. There is no doubt in my mind that this will be the RTTY of the future, although I have no actual experience with it. ON4UN has been using it with quite spectacular results. He is using a circuit board developed by the British. John has interfaced it with his HAL CT2100 and says it works very well. To quote him: "The amazing thing is you can really turn down the power, and watch yourself to see how the other station is receiving you. Recently I was QSO with a GM station on ten meters with 100 milliwatts of power and the copy was 100 percent."

W2LFL, Bud, sent a copy of a British article on Amtor which describes the equipment necessary to do the job. It really looks like it will grab hold all over the spectrum.
[Ed. note: The RTTY JOURNAL will reprint its' Amtor article, with an update, first published in December, 1980,in the May issue of the JOURNAL]

JI1VLV, Nana, spent the month of February in Kenya. Nana, you might remember, is the young Japanese lady who was on from Nepal last winter. At the end of February, when I heard Nana calling CQ from Nairobi, I gave her a call. She came back and informed me that I was her first QSO with the USA. That started a pile-up. K7BV, Mac, and WDØHXQ, Arlin, were two stations that I observed working with Nana. QSL is via her home call JI1VLV.

Whenever I think of Nairobi I recall the wonderful times I had with Robbie, VQ4ERR, when I was there photographing East Africa. You old timers will probably remember Robbie as the first Amateur station in the world to complete the ARRL DXCC. He was issued DXCC number one. He ran a drug store, or chemist shop as they call them, in downtown Nairobi. Every time I would come back to the city I would drop out to Robbie's shack and enjoy an evening with him. He was a real DXer and in a very good spot to pursue his DXing hobby.

5Z4RT, Hermann, sent pictures of his shack along with his QSL card. He has quite a layout of fine gear, with HAL showing up quite prominently. Hermann also tossed in a picture of himself, his dog and a parrot (see cover pictures.) I wonder if he has trained the bird to call CQ on SSB?

The friendships we develop on RTTY is really the best part of the hobby. IØAOF, Joe, is a determined award chaser, and he likes to get some awards the "hard way." For instance, a CW WAS with two letter calls only. He needed North Dakota to complete the project, so he asked me, in one of my many chats with him, if I knew anyone with a two letter call who could do the job. I thought of WØCZ, Ken, who is a fellow RTTY op. I finally got the two of them together on Sunday afternoon, and Joe has his two-letter WAS assured.

One RTTY-fan passed along a rumor that the ARRL was now endorsing DXCC awards for more than 100 countries. Wll, it isn't so! Don Search, the major-domo of the DXCC lists, informed us that there are no plans for such an action. When someone sends in a stack of cards, they verify the first 100 and then stop. They keep no records, and do not issue anything other than a bare-bones certificate. Don says there is really not too much call for the award and there has even been talk of dropping both the RTTY and the 160 meter awards. After listening to the ARRL phone contest in

12TH G A R T G CONTEST 1983

General:The German Amateur Radio Teleprinter Group (GARTG) sponsors their 12th GARTG Short Contest and welcomes participation of all RTTY-Amateurs in and outside the Federal Republic of Germany. There will be a shortwave and VKF contest. Both contests will be scored separately. The contest is split in 5 single contests within a year. After the 5th single contest the winner of the year in each classification will be stated. See exchange table on page 15.

SHORTWAVE:

1. Saturday Feb.19, 1983	1300-1700Z
2. Sunday Apr.17,1983	0700-1100Z
3. Saturday Jun.11,1983	1200-1600Z
4. Sunday Aug.28,1983	0700-1100Z
5. Saturday Oct.15,1983	1300-1700Z

VHF:

1. Sunday Feb.20,1983	0800-1200Z
2. Saturday Apr.16,1983	1200-1600Z
3. Sunday Jun.12,1983	0700-1100Z
4. Saturday Aug.27,1983	1200-1600Z
5. Sunday Oct.16,1983	0800-1200Z

Bands: 80 and 40 meters VHF:2m & 70cm

Contest Call:CQ GARTG contest. After each QSO the station having called last keeps the QRG. The previous holder should make QSY.

Exchange: Shortwave: RST, QSO-number, name, QTH. VHF:same as shortwave in addition QTH-locator.

Scoring: Each station may be worked once per band. Each complete QSO counts 1 point on 80 and 40M. VHF: each complete QSO on 2m and 70cm counts 1 point per kilometre worked. Contacts via repeaters are **not** valid! Final score: Total of QSO points.

Classifications: Class A; shortwave stations with more than 200 W input. Class B:shortwave stations with up to 200 W input. Class C:SWL stations Class D:VHF stations.

Logs: TO CONTAIN: Call, name and complete address, classification, time in UTC (Z), call, name, QTH station worked, transmitted and received message numbers, band used, final score (logs without final score will count as check logs), VHF: same as shortwave plus QTH-locator sent and received. SWL: for points and scoring confirm above. The same stations may be reported only two times. Instead of message received, the SWL should report Call of partnership (worked.)

Results: The results will be published in the GARTG newsbulletin RTTY-NEWS and in our club magazine "RTTY", and the RTTY JOURNAL.

Logs: to be received **not** later than 20 days after closing each single contest.

Contest Manager: Wolfgang Puenjer, DL8VX, POB 90 11 30, D-2100 Hamburg 90, Republique Federale d'Allemagne.

NEW PRODUCT REVIEW

The new MFJ-1220 RTTY/CW computer interface is a terminal unit that provides TTL/CMOS and RS-232 levels for computer interfacing.

Unlike phase-lock loop demodulators this is an optimum design using individually tuned active bandpass filters. It has separate mark and space channel filters, CW filter and post detection low pass filter for excellent weak signal and high interface RTTY/CW performance.

It takes received RTTY/CW audio from your transciever, demodulates it and provides TTL/CMOS and RS-232 levels for interfacing with nearly any computer. A program (not included) is used to provide RTTY/CW text.

For RTTY transmission, your computer drives the AFSK generator to provide FSK transmission using the microphone or phone patch input of your SSB transmitter or it can directly key the FSK input of your transmitter.

For CW transmission, your computer drives the high voltage keying currents of the MFJ-1220 which then provides a grid block or direct keying for your transmitter.

The RTTY/CW interface transmits and receives all standard RTTY shifts of 170, 425 and 850 Hz. It uses standard space and tones.

The MFJ-1220 operates on 12 VDC or 110 VAC. Has a 30 day money back trial period and a one year unconditional guarantee. Order from MFJ Enterprises for $179.95 + $4.00 shipping.1-800-647-1800 Or POB 494,Mississippi State, MS 39762.

PACKET RADIO-CONTINUED FROM MARCH

The FCS allows the receiving station to verify that the packet has been received correctly. If the FCS calculated by the receiving TNC matches the FCS of the packet, an acknowledgement is sent; otherwise the packet is ignored.

The final FLAG marks the end of the packet.

WHAT IS A PACKET NETWORK?

A local area packet radio network (LAN) consists of a net control station and a number of individual operators. The net control station is sometimes refered to as the "station node" and the individual stations as "terminal nodes." The net may also contain a digital repeater or "digipeater." which may be the net control station or a separate repeater station. The repeater station may be a single-frequency simplex repeater which retransmits any correctly received packets, or it can be "normal" split-frequency repeater.

As operators sign on to the net, they are recognized by the net control and given net address codes. An oerator desiring to start a QSO with another station will subsequently have his transmissions addressed to that station. Any operator may choose to have his TNC receive all transmissions, rather than just those addressed to his station. Of course, the TNC will only acknowledge those transmissions intended for that station. The operator whose station is functioning as net control participates in exactly the same way as the other operators. The net control functions are taken care of automatically by his TNC.

As more packet radio LANs become active, there will be the possiblilty of link stations with access to two distinct LANs. These stations can be members of both nets and serve as communications links through which packets originating in one net can be funnelled to an addressee in the other net.

A more sophisticated possibility is that of a "gateway" station, which will be a specialized station having access to some long-distance mode of communications. The gateway station will reformat packets with another

A RTTY DXers' Dream

IRL T.M.

700 TAYLOR RD.
COLUMBUS, OHIO 43230
(614) 864-2464
VISA OR MASTER CHARGE ACCEPTED
IMMEDIATE DELIVERY

At IRL, we believe that the RTTY ham should be limited by his skill as an operator—not by his demodulator. The FSK-1000 and FSK-500 were conceived and specifically engineered for use on the crowded HF ham bands, to give the serious DXer, contest operator, or MARS station a competitive edge when the QRM gets rough.

CHECK THESE OUTSTANDING FEATURES!

FSK 1000
TERMINAL UNIT

- Unparalleled selectivity achieved with sophisticated true limiterless design
- Ultra sharp active filters
- Tuneable shift (80-1000hz)
- Selectable bandwidths (100/55hz)
- Three mode autostart
- Positive dynamic range indicator
- Extruded aluminum enclosure
- Rugged commercial quality
- Adjustable "mark hold"
- Keyboard activated transmit
- Optional AFSK keyer
- Internal loop supply
- RS232 or TTL
- Full one year warranty

FSK 500
TERMINAL UNIT

- Superior selectivity
- Selectable bandwidths
- All standard shifts
- 3 shift AFSK keyer included
- Narrow shift I.D. included
- Preselector included for QRM suppression
- Economically priced
- Fully wired and tested
- Compact size
- RS232 or TTL
- Full one year warranty
- Optional loop supply

Both the FSK-1000 and FSK-500 are easily interfaced to your APPLE, TRS and HEATH computer.
Call for further details.

HITS & MISSES by GEORGE

GEORGE HAMMON, WA6CQW
14715 Pecan Park Lane Space 73
El Cajon, CA 92021

RAIN AND WIND

In my column last month I mentioned that the wind and rain got my antenna system. I lost my tower, antenna and rotator. I started looking at the ads to replace my system immediately. I had saved up enough to make Dayton this year so I started looking for replacements with some money in my pocket. I soon realized that the prices of antennas etc. have gone up, just a little bit, since I put up my system in 1977. I realized that the price of a tower would eat up all of my Dayton money and I became discouraged. My Dayton money sure looked puny.

A phone lead on a Wilson tower was checked out at the local swap meet. The tower was almost new with base, bolts and documentation so I purchased the tower with my Dayton money. Oh well! maybe next year. A crew of local hams helped me haul the tower home.

A heartfelt thanks to all those who gave their time, labor and gasoline to help me. The advice, labor and even their encouragement when things looked impossible, made a real tough job so much easier.

I received a new antenna and rotator for my birthday. My wife, Jeanne even got me new coax. So, while I will not make it to Dayton this year, it looks like I will be back on the air in time for some of the BARTG contest.

US GOVERNMENT PRINTING OFFICE

For your free copy of the recent United States Government Printing Office release, contact Superintendant of Documents, US Government printing office, Washington, D.C. 20402.

VIC-20/TRS-80

RTTY and Morse code programs are now available including FSK, for the Vic-20. Send an SASE to Frank Lyman, PO Box 3091, Nashua, NH 03061. Frank also has RTTY and Morse code programs for the TRS-80. Don't forget to SASE to the address listed above.

END CAPS

While putting my antenna together I was puzzeling over an end cap for my mast. I was looking at the QST March 1983 and on page 41 was my solution. The metal and plastic caps from spray paint, insect spray etc. come in a variety of sizes. I was able to find one which fit my two inch mast. N1FB, Paul Pagel, was the source. Paul said the caps are very functional as they keep water out and they also add color to your antenna.

I will close out my column for this month. The tower is up and the sun is shinning so perhaps spring is just around the corner. I hope you all have fun at Dayton--look for John and Dee to be there. I hope to make it next year for sure. Meanwhile, closer to home, look for the RTTY California gang to be at the DX Convention in Visalia April 16.

So long for now, George, WA6CQW....

COMING NEXT MONTH

AMTOR - revisited
From December 1980 RTTY JOURNAL

NO NONSENCE APPLICATION OF THE "BIPOLAR TRANSISTOR".

The RTTY JOURNAL still has a supply of the RTTY beginners handbooks. They are still $8.00 (plus postage for overseas delivery.) Mail check or money order (US funds only) to:

RTTY JOURNAL
P.O.Box RY
Cardiff-by-the-Sea, CA 92024-0179 USA

PACKET RADIO CONTINUED

layer of protocol containing internetwork linking information and transmit it to another gateway station in a distant LAN. Three possibilities are being explored for long distance links.

TERRACON will be a high speed, ground based linking system utilizing UHF and/or microwave relays. It could potentially handle most long distance packet radio communications in the United States and Canada. It will probably be a few years before TERRACON is implemented for long distance links.

AMICON will be a satellite based network utilizing one of the special services channels on the AMSAT Phase III-B satellite. AMICON will allow intercontinental linking and contact with isolated areas not accessible to TERRACON. High data rate experiments are being planned for the 23 cm uplink/70 cm downlink (mode L) translator. There are also plans for a packet radio digital repeater aboard the AMSAT Phase III-C satellite.

SKIPCON is AMRAD's projected HF network of LAN gateway stations. The nature of HF propagation will require slower data rates (75 to 600 baud) and error correction as well as error detection protocol. SKIPCON experiments have been conducted since the end of 1981.

HOW TO GET INTO PACKET RADIO

There are currently two TNC designs available. The first packet radio TNC was designed by Vancouver Amateur Digital Communications Group (VADCG.) The Vancouver TNC is available as a bare board, and requires a power supply, and external modem, and parts. It comes with instructions and notes on the power supply. A modem kit is also available from VARCG. The TNC design is based on the INTEL 8085 CPU and 8273 HDLC controller and includes 4K bytes of 2114 Ram and 4K bytes of 2708 EPROM. The TNC requires an 8250 (serial ports) or an 8255 (parallel ports) for interface to the terminal, as well as an interface to the radio.

The Tucson Amateur Packet Radio group is currently testing a second

DRAKE COMMUNICATIONS TERMINALS

Microprocessor Controlled

DRAKE Theta 9000E

The ultimate in communications versatility, the **Drake Theta 9000E** provides complete transceive capability of CW (Morse Code), RTTY (Baudot), and ASCII. A full computer RS232 interface, cassette tape storage port, selective calling feature with answer-back, light pen graphics, printer interface and word processing software are all standard.

Seven large 256 character memories are backed up with battery power so there is no need to reload information with each use. Memories may also be partitioned providing up to 29 separate storage locations. A type-ahead buffer of 3120 characters makes it easy to compose your response while still receiving. Operator controlled scrolling permits review of up to 10,720 previously received characters. Line length is selectable at 40 or 80 characters, your choice, and all mode and speed indicators are displayed on the screen for instant status recognition. The 9000E has 3 tone groups and 3 shifts which are all keyboard selected.

You won't buy any other communications terminal once you have studied all the advanced operating convenience built into the **Drake Theta 9000E**. It's complete.

DRAKE Theta 550

The **Drake Theta 550** is a compact receive-only communications terminal and is designed to demodulate and display the three most popular over-the-air modes of data communications: CW (Morse Code), RTTY (Baudot), and ASCII. Any standard TV monitor can be used.

A full-featured microprocessor controlled unit, the Drake Theta 550 has selective calling, battery backed-up memory, audio monitor, and informative L.E.D. tuning indicators. There is also interfacing to permit the addition of a dot matrix printer for "hard" copy and a keyer paddle input to permit CW transmission with full iambic operation.

CW automatically tracks over a speed range of 5 to 50 words per minute and RTTY modes offer nine selectable standard speeds of transmission. 12 volts DC is required.

This unit is ideal for shortwave listeners and hams who have been missing the increasing volume of data communications over the air.

LA7 Line Amplifier

Line output, input levels as low as 15 mV rms (47 kilohm) will result in an output of 1 mW nominal into a 600 ohm balanced line. Output level adjustable by internal preset level control. Interfaces low level audio to RTTY terminal unit or phone line that requires a 600 ohm balanced/unbalanced input. One 36" phono to phono cable supplied.

R. L. DRAKE COMPANY DRAKE

540 Richard St., Miamisburg, Ohio 45342. USA
Phone: (513) 866-2421 • Telex: 288-017

DX COLUMN CONTINUED

March, I think they ought to drop the phone award. If you feel the ARRL should issue RTTY endorsements, then the place to start is with the DX advisory committeeperson in your area. (ARRL has consistently treated RTTY as a poor step sister, but I don't see them turning down any advertising from RTTY manufacturers!)

F8XI saya there is a rumor floating about the bands that another Nepal expedition is in the offing. Two Japanese hams are contemplating the journey.

The RTTY gang in Silicon Valley send along a list of commandments for the RTTY tribe. Here it is for your information. The chair will entertain suggestions to add or change the list.

COMMANDMENTS FOR THE RTTY-ER

THOU SHALL:

1. First listen on new frequency, then ask QRL?
2. Not call CQ without your call at least once per line.
3. Not call CQ for more than three lines except when inserting foreign language.
4. Not call CQ with numbered lines.
5. Not start or end each transmission with your date/time generator.
6. Not use more than one LF if possible.
7. Not call for more than one line in a DX pile-up.
8. Not start to BS when working that rare DX in a pile-up.
9. Not announce "CW ID FOLLOWS:", just send call in CW and then only when required by law.
10. Be damned when you send (((((((((((73))))))))))).

10A. Insert a FIG after each space followed by a number (hate that 579 TUO TUO TUO.)

10B. Not interfere when the bulletin station is transmitting.

10C. Not send the letter O when it should be a Ø (or vice-versa.)

10D. Refrain from repeating reports, name and/or QTH when he just gave you a 599 (which means SOLID COPY!)

Any additions to the list? I think it's a good list, but it's a sneaky way of getting 14 commandments into ten! These suggestions came from a ham who has been banging the green keys for 16 years and the list has grown out of that experience.

5Z4DA, Bryan, can be QSL'd via Box APO New York 09675.

KN6O, Joe, asks that we explain those strange noises you hear around 14075/21075. They are AMTOR signals, the self-correcting RTTY mode. If anyone deliberatly QRM's the AMTOR signal, which of course is illegal, the only thing it will do is to prolong the AMTOR transmission, because the AMTOR system will keep at it until it gets a perfect copy. I never thought of that, Joe, but that's a plus for the mode.

RTTY-BITS: Watched a YS station turn up in the 73-RTTY JOURNAL Contest and when he found out he was in the middle of a contest said: "QRT!". ..W7NJ, Rex, who is 80 years old and has been a ham for 63 years, also turned up in the last contest. "I'm just a green pea on RTTY!" he exclaimed.

Thanks to the Hams mentioned above plus, W5HEZ, K1PLS, W2LFL, K1NVY/7, JA1ACB, and all those I eavesdropped on for fun.

73 and "dit dit." Bill WØLHS.

HONOR ROLL

ON4BX	219/214
ON4CK	214/209
JA1ACB	214/208
K7BV	210/207
W3KV	209/208
F8XI	185/175
W2LFL	183/182
JA8ADO	172/166
W8JIN	166/160
JA1DSI	161/150
W3FV	160/145
JA1JDD	155/137
OK1JKM	154/130
F5JA	150/144
W6JOX	149/139
W2PSU	148/140
JA1ZF	144/122
ON4UN	138/108
K6WZ	133/121
KØBJ	131/122
UT5RP	127/093
W7MI	124/112
WØLHS	122/116
K1VNY/7	121/113
K4VDM	121/106
KB9IS	116/107
KA5BOZ	114/101
K4JAF	114/098
JR6AG	114/093
WØHAH	110/104
WB3HAZ	110/087
K1LPS	108/097
N4FJL	096/054
W5HEZ	091/060
KØJH	090/076
WA3ZKZ	084/073
ABØY/4	079/068
TI2DO	077/066
WB8YJF	066/033
AK2H	064/045
KB2VO	060/040
WDØFSJ	033/006

If your call is not listed, it's because you didn't send in an update. We started from scratch again. Next listing in October.

HAM HELPS

R.L. Robinson, K6THV, 19141 Stingray lane, Huntington Beach, CA 92646 needs help in getting on RTTY with his Xerox 820 II. He has CP/M and Mbasic and an 33ASR for a printer. How about some help out there?

PACKET RADIO CONTINUED

TNC design. This TNC has the modem, radio interface, serial and parallel terminal interfaces, and power supply circuitry (exclusive of the transformer) on a single board. It is based on the 6502 microprocessor, and can hold a total of 48K bytes of Ram and ROM on the board. The 1933 HDLC chip it uses is compatible with the 8273 chip used on the VADCG board, and the TAPR TNC will be capable of VADCG-compatible protocol.

For more information on packet SASE to:Tucson Amateur Packet Radio, POB 22888, Tucson, AZ 85734. Den Connors, KD2S, Lyle Johnson, WA7GXD, Marc Chamberlin, WA7PXW, Chuck Green, NØADI, Margaret Morrison, KC7MA, And M. Parker, KC7GD encompass the board.

* CONTESTS * CONTESTS * CONTESTS *

WORLD COMMUNICATION YEAR RTTY CONTEST

CONDUCTED BY THE AUSTRALIAN NATIONAL AMATEUR RADIO TELEPRINTER SOCIETY. (replacing the VK/ZL/Oceania RTTY DX contest for 1983.)

DATE: 11th to 13th June 1983.

TIMES: 0000Z 0800Z Saturday 11th June
1600Z 2400Z Saturday 11th June
0800Z-1600Z Sunday 12th June

BANDS: 3.5, 7, 14, 21, & 28 MHz.

CLASSES: a) single operator
b)multi-operator
c) S.W.L.

NOTE: Logs of multi-operators must be signed by all operators, together with their callsigns. Incomplete log gings are not eligible for scoring.

NUMBER EXCHANGE: Serial number will consist of a) RST
b) Zone
c) Time in UTC

SCORING: As per C.A.R.T.G. Zone chart, multiplied by the number of countries worked, multiplied by the number of continents worked (maximum six). After the above calculators, world stations add 100 points for VK/ZL station worked on 14 MHz. 200 points for each station worked on 21 MHz. 300 points for each VK/ZL station worked on 28 Mhz. (example: 720 points from chart x 29 countries worked x 5 continents worked = 104,400 points, plus 6 VK/ZL stations worked on 14 Mhz (that is 600 points) giving a total of 105,000 points. A station may be worked only once on each band, but may be worked on another band for futher multipliers.
COUNTRIES: Country count as per ARRL list of countries, except that each VK, ZL, JA, VE, VO and W/K districts count as separate countries. Contact with one's own count as zero points for multipliers.

LOGS: logs must show in this order:
1. Date
2. Time (UTC)
3. Callsign of station worked
4. Serial number sent
5. Serial number received
6. Points claimed.

CLOSING DATE:
Logs must be received by the last mail on the 19th August, 1983. The address for logs is: W.J. Storer, VK2EG, 55 Prince Charles Rd., Frenchs Forest, 2086, N.S.W. Australia (airmail suggested.)

SUMMARY SHEET: Summary sheet must show callsign of station, name of operator/s and address of same, bands used (a separate log sheet is required for each band.) The points claimed for each band, number of VK/ZL stations worked, total points claimed and signature. Multi operator station logs must contain the signatures and callsigns of each operator.

AWARDS: 1st single world basis, trophy donated by Mr. Butler, secretary general of the I.T.U.
1st multi operator world basis, trophy donated by Mr. Butler.
1st VK single operator trophy donated by A.N.A.R.T.S.
1st VK multi-operator trophy donated by A.N.A.R.T.S.
Certificates will be issued for second and third on a world wide basis and for the winner in each country.

Trophies will be presented at the I.R.E.E. convention to be held in Sidney between the 5th to 19th September by Mr. Butler.

A certificate of participation, signed by Mr. Butler, will be issued to all contestants in the World Communications Year RTTY contest.

The judges decision regarding the placings will be final and no correspondence will be entered regarding same. The logs become the property of the contest committee on completion of checking.

This contest is organised and conducted by the Australian National Amateur Radio Teleprinter Society, POB 860, Crows Nest, N.S.W., Australia. (Official club station is VK2TTY.)

AWARDS

DXCC RTTY AWARD #74 Raymond Owen W8UMG.
DXCC RTTY AWARD #75 Junichi Nishiyama, JR2TZL.
DXCC RTTY AWARD #76 Yoh ichi Murakami JA3EOP
DXCC RTTY AWARD #77 Dick Henry KB9IS.
DXCC RTTY AWARD #78 James Cox K4JAF

CANADIAN AMATEUR RADIO TELETYPE GROUP

22 ANNUAL RTTY DX "BIG SMOKE" SWEEPSTAKES (VE3RTT)

SINGLE OPERATOR SCORES

1.JA6GIU	2,538,638	32.WA6WGL	100,992
2.YU7AM	2,379,648	33.KM5D	99,408
3.W3FV	2,205,018	34.VE5RC	90,268
4.VK2SG	2,205,018	35.AE5H	87,120
5.SM6ASD	2,032,302	36.DF7FB	82,520
6.K4AGC	1,791,296	37.VE7BDQ	59,470
7.IØLIQ	1,582,788	38.VE7EJ	55,908
8.I1TXD	1,577,880	39.OK2SPS	48,344
9.DJ6JC	1,484,808	40.DJ1XT	45,120
10.ISØVSA	1,356,578	41.VE5WZ	39,688
11.ON7EP	1,351,568	42.JR6AG	29,072
12.I4JXE	1,270,702	43.KE6T	28,804
13.KØJH	1,218,006	44.ABØY/4	27,080
14.VE2AXO	945,600	45.HB9BZZ	23,940
15.WB5HBR	924,038	46.K8CV	21,110
16.K1LPS	868,955	47.WB4UBD	20,740
17.K6WZ	700,720	48.KØBU	14,840
18.VE7YB	663,484	49.HB9BQL	14,760
19.VE8CM	640,062	50.DK5KJ	11,468
20.VE2JR	630,496	51.DF6ZY	9,780
21.W6JOX	536,720	52.LA2IJ	9,521
22.DL1VR	511,360	53.SM7ABL	9,260
23.VE7CIM	481,340	54.DF6BX	8,772
24.W7MI	395,600	55.OZ1GRF	7,195
25.GW3EHN	294,000	56.SM6EKP	4,032
26.HZ1AB	242,790	57.SM5HQN	1,260
27.PA3BCU	212,480	58.Y37UF	640
28.VE7VP	189,500	59.W8TCO	500
29.TI2DO	160,560	60.SM5AAY	174
30.WDØFSJ	139,330	61.DK4IS	132
31.DJ9IR	114,980		

Multi-Operator Scores

1. LZ1KDP	3,845,966
2. OH2TI	1,396,738
3. VE3LR	241,415
4. KC4AAA	236,216
5. OK3KII	211,008
6. OK1OAZ	98,870
7. OH8TA	79,300

SWL Printer

1. OZ-DR2135	1,439,492
2. DE1GMB	380,470
3. NK-4483	180,120
4. DE4TTY	134,490

Check Logs

SM6AEN and DF9XI

Congratulations to winners of engraved plaques sponsored by the "RTTY JOURNAL" and C.A.R.T.G.

78 different countries reported contacted, well ahead of last years contest.October 15 16 for next contest.

RTTY THEORY AND APPLICATION

AFSK KEYERS

The diagram of the unit we use is shown below. Basically, the keyer is a single tube Hartley oscillator fol lowed by a cathode follower. The os cillator is tuned to the space fre- quency. The frequency is shifted to mark by placing additional capaci tance across the tuned circuit. The placement of the additiona. capaci- tance across the tank is done by means of the pair of diodes. This method of keying or frequency shift ing is refered to as "dry keying," because a relatively small voltage and current are present in the diode circuit and therefore in the keyboard contacts on the teleprinter.

The first objection to the circuit is the so called "dry keying." The contacts on a teleprinter keyboard are designed to work in a 130 volt, 60 MA loop. One advantage of this relatively high voltage and current in the contacts is that it tends to clean the contacts by burning out the oil film that gets on them. Another disadvantage of the "dry keying" is that the space frequency is dependent upon the capacitance of the leads from the keyboard to the keyer. There fore, the space frequency has to be adjusted with the keyboard contacts connected (but open), and, if the lead length is changed, the frequency must be readjusted.

Both of these objections can be eliminated by using a polar relay to do the keying (the diodes are not needed in ths case.) However, a polar relay has the disadvantage that most people don't know how to adjust one. This does have a simple solution: use the I 193 C Polar Relay Test Set (there is some objection to polar re lays because they are mechanical de vices. We have not yet seen a tele printer that did not have a slight resemblance to something mechanical; therefore, we won't buy the anti polar relay pitch based upon mechani cal arguments.)

The keyer suffers from rather serious transients in about the first 5 mS after switching from one tone to the other. This is a natural re sult of the frequency changing used; i.e., adding and removing an energy storage element from an oscillating tank circuit. For use in a QSO, this transient does not appear to have any deleterious effects; however, when using the keyer for test purposes, the keying transients cause quite a bit of "jitter" that make some tests difficult. It should be possible to reduce the transcients by using two separate continuously-running oscil- lators and switching their outputs.

Because of the nature of a single oscillator whose frequency is switched, the mark frequency is de- pendent upon the space frequency. This interdependence is a real nui- sance when adjusting frequencies be- cause any time the space frequency is changed, the mark frequency also changes. The solution is two separate oscillators.

Next problem: because of the fre quency response of the audio input circuit in the transmitter, it may be necessary to make the two fre quencies coming from the keyer have two different levels. Also, for test purposes, it may be desirable to have the two tones at some other levels. The keyer being discussed can have the two tones set over some range of values, but the levels are quite in terdependent. A simple solution is two separate oscillators with sepa rate output levels controls in each oscillator as well as a master level control.

One additional note: The output from the keyer should be derived from a transformer so that hum and noise pickup is minimized by using an un grounded output pair.

So, the new keyer should have the following. two separate oscillators permitting independent frequency and level adjustments, a floating output, and an input from the keyboard that is compatible with a 130 volt, 60 mA loop.

The oscillators should be of simple design consistent with good waveship and relatively small ambient tempera ture and supply voltage dependence. A single junction FET in a Hartley circuit should be suitable for each oscillator. We have looked into RC circuits (rather than the LC such as the Hartley) and found shortcomings in each type investigated.

The switching between oscillators for the output can probably be done by means of simple diode gates driven from the keyboard loop. The output from the gates should go thru a simple low pass filter to reduce switching transients as well as har- monics from the oscillators. A single stage of amplification into an output transformer should finish up the keyer.

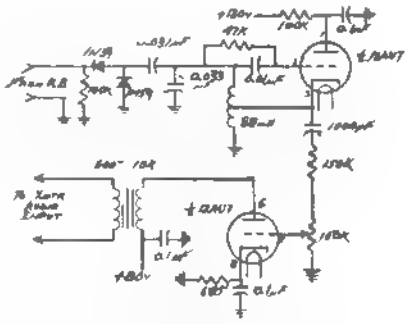

HAM HELPS

There are numerous newsletters out for ham/computer users. The following is a new (to us) one: QZX (for Sin clair ZX 80, ZX 81 and Timex Sinclair 1000 owners. 2025 O'Donnell Drive, Las Cruces, NM 88001. Bo Barry, W4GHV is editor and Alex Burr K5XY is pub lisher. $12.00 per year.

Emile Ness, 773 Rosa Ave., Metaire, LA 70005 wants to get in touch with other IBM PC owners to share info on his homebrew software.

The RTTY JOURNAL still needs arti cles hints and kinks and good photos of your rigs (preferable with you in the picture.) Short articles are also always appreciated. RTTY club news will be used on a space available basis. Hamventions are also men tioned on a space available basis. News of Dxpeditions, especially with pictures after the event are a wel- come treat for our readers. Have you found a new or different way of get ting on RTTY? Of interfacing your computer for RTTY?

Meanwhile stay happy..We will see you all (????? in Dayton??? We shall stay at the Imperial House North and hope to meet all of your there or at Hara Arena. Dee, N6ELP.....

NEW UNIVERSAL M-600
MULTI-MODE, CRYPTO-DECODER

UNIVERSAL M-600 RTTY CODE RECEIVER

THE ONLY RTTY UNIT THAT DECODES —

- **BIT INVERSION**-method used for security and privacy by governments, business, press and others, automatic system opens up a new world of RTTY listening. Now you can copy those stations that defied copy on standard RTTY units.

- **TOR-SITOR**-Both ARQ and FEC modes used by Marine, telegraph, World Press, Coastal Stations and Government Services. This approaches error-free copy.

- **NON STANDARD SHIFTS**- Used by RTTY services to effect a form of security to their transmissions by the use of non standard shift of RTTY signals, quite common in commerical RTTY. The M-600 has a continuously variable shift capability over a wide frequency range.

- **WEATHER FORMAT**- Allows reception in straight text of many weather stations with the use of standard weather map symbols in everyday use around the world. This is very interesting to copy.

PLUS — All speeds of BAUDOT, ASCII and MORSE (CW). M-300 keyboard plug-in for transmit. BAUDOT, ASCII, CW.

★ AMTOR when approved.

Partial List of Features of the New Revolutionary UNIVERSAL M-600

BIT INVERSION-5 level security bit inversion for baudot decoding from key pad. Decodes any combination of bit inversion being used for security.

TOR-SITOR-Both ARQ and FEC modes with full receive only function on these codes. Amtor when approved.

WEATHER TEXT-Weather Bureau symbols, arrows and other weather type uses. Key pad Controlled.

SHIFTS-Key pad selectable shift selection, 170, 425 850 plus variable space channel allows copy on mnay non-standard shifts being used as security mode. There is a separate demodulator for 150 through 1200 baud rate high speed RTTY.

ASCII-110, 150, 300, 600, and 1200 baud rates

BAUDOT—60, 66, 75, 100 and 132 WPM

MORSE-CW-AUTO-RANGE up to 60 WPM

SPEED READOUT-ASCII and BAUDOT

MULTIPLE SCROLL INHIBIT

UN-SHIFT ON SPACE

SELF-TEST SYSTEM-Allows check out of M-600 operation.

AUDIO INPUTS-4 to 600 OHMS .25V.P-P.

VIDEO OUTPUT-Composite video. 1.5V.P-P., negative sync.

PRINTER DRIVER-Isolated loop, Mil-188 or RS232 and optional parallel ASCII. All with handshaking available. Baud rates of 45, 50, 57, and 74 in baudot and 110, 150, and 300 in ASCII. The M-600 will drive almost any printer available at any of the input modes.

PRINTER MODE-Baudot 60, 66, 75, and 100 WPM.

PRINTER SPEEDS-ASCII 110-150 and 300-parallel ASCII.

PRINTER BUFFER—A 2K printer buffer allows reasonable down conversion and handshaking of printer.

LOOP SUPPLY-60MA/20MA auto adjusting loop supply available as an option.

STATUS LINE

OPTIONS-Built-in loop supply /parallel printer output

WARRANTY-115/230V 50/60Hz 25 watts

SIZE-16 3/8 x 3-1/2 x 10-3/4 in. deep.

WEIGHT-9 pounds - shipping weight 12 pounds.

UNIVERSAL ELECTRONICS, INC.
1280 Aida Drive
Reynoldsburg, Ohio 43068

PHONE: (614) 866-4605

PRICE $799.95
Shipping Extra
VISA & MC Accepted

CLASSIFIED ADS

30 WORDS $3.00, ADDITIONAL WORDS 5¢ EACH CASH WITH COPY--DEADLINE 1st of month for following month.

ST5 AND ST6 KITS STILL AVAILABLE FROM HAL. We still have the original HAL ST5 and ST6 parts kits available. The ST5 kit is complete with autostart, AKI AFSK oscillator, and mini-box for cabinet (no drilling or screening)... $125.00. ST6 parts kit has 3 shifts with XTK100 crystal AFSK oscillator and screened and drilled HAL cabinet $275.00. Purchase from a HAL dealer or direct. HAL COMMUNICATIONS Corp., P.O.B. 365, Urbana, IL 61801. 217-367 7373.

SALE:PERFORATOR TAPE 11/16" wide x 8" diameter, case of 40 rolls $18.50; case of 1" perf tape (28 rolls) $18.50; Teletype ribbons, box of a dozen $7; M28 TD stand alone type $89;M28 TD with 3 speed gearshift $180; M28 typing unit, sprocket feed, as removed from equipment, complete less typebox $49; M28 ASR underdome reperf, replace your keyboard operated perf with a reperf, while they last $79; M28 LARP, multi-magnet reperf complete with motor and hardware to mount above 28TD in ASR cabinet $39; M28 LESU, various types $12; M28 stock ticker strip printer, uses 1" wide reperforator tape $49. We carry a full line of Teletype machines and parts. All prices are FOB Brooklyn, NY. Call Ed, WA2FBY, Atlantic Surplus Sales, 3730 Nautilus Ave., Brooklyn, NY 11224, Tel:212-372-0349.

RTTY PC BAORD SPECIAL-Some quantities limited. The famous UT4D speed converter PC board, was $22.95 now $12.95. The UT2 Regen/speed converter board, was $14.95 now $10.95. XB6 Xtal clock PC board for above was $8.95, now $4.94. RTTY ID PC board, was $6.95, now $1.95. Send stamps for our free flyer of over 1,200 items or send $1.00 for our catalog (refundable on purchase.) Add $1.75 shipping to orders. DATAPRO ELECTRONICS, 3029 N. Wilshire Ln., Arlington Hts., IL 60004.

USED AND ABUSED Teletype machines and parts. Junking 28, 33, 35 and 43 models. Aaron C. Dickey, K7GCP, 51 N. 850 West Orem, Utah, 84057. 801-225-0678.

TRADE: SHINTRON B & W television switcher/spec effects package for Drake, HAL or similar glass RTTY. Or $300. Scott, W3MED, 301-757-1991.

TRY NEW 10MHZ RTTY! New KT30 antenna ready to use only $27.50! KT5B Multiband 160 thru 10M only $59.95. Complete line of antenna materials. KILO TEC, POB 1001, OakView, CA 93022. Call 805-646-9645.

FOR SALE: KNWD VFO-520, $100. Kantronics FD-2 CW/ASCII/TTY reader $250. MFJ 496 Super kybd with AFSK, $200. N6EGY, John, 805-964-8340 - make offer.

SIEMENS T-100 60Hz, 60 WPM gear, UOS auto CR/LF option kits. 3-12-6 Ohgicho Iwankuni-shi, Yamaguchi-ken 740, Japan. Toru Aoki, JA4ONZ.

RTTY-MARS-RTTY-MARS-RTTY-MARS-RTTY-Have you heard about the new HAL "Message Processing Terminal" software for the DS-3100ASR? Throw away your paper tape and roll paper! Complete inmemory message and traffic handling. Call or write Dick, KOVKH, DIALTA Amateur Radio Supply. 212-48th St., Rapid City, SD 57701. 605-343-6127. All of your HAL and INFO-TECH equipment needs. Our prices can't be beat!

FOR SALE: Signalman Mark I modems (direct connect) (please write for info spec sheet on this modem if interested.) 0-300 Baud orig & ans modes RS232 $92; Paper bond 14 7/8 x 11 blister pack, 500 forms $7.00; paper bond 9½ x 11 tear away perfs $36 per case of 3,000 forms;Paper bond 9½ x 11 blister pak 500 forms $7.25; Paper TTY G/W roll friction single ply $1.50 per roll; Paper TTY bond roll friction single ply, $2.50 per roll; Cable ties 5" (strong nylon) 100 for $1.75;TTY ribbons heavy ink, nylon double spool $1 each. M33 schematic sets $11 each (new original sets); M33 manuals 3 vol. Set 1,2 & parts $25 each; RS 232 cables (specify Male to Female etc) 15 ft. 25 pin throughput $25 each; RS 232 Teletype interface for M 33 & 32 installs easily on UCC 6 or 5 complete with cable (please specify 33 or 32) $129 each. 8 level or 5 level tape $1 per roll. TRAM TELETYPEWRITER SERVICE, 50-0 Corbin Ave., BayShore, NY 11706. 516-242-5011.

FOR SALE:INFO-TECH M300C +200F also digital tape unit (DTU-1) with 50 mag. tapes containing about 800 RTTY Pix. Comes with new Radio Shack cassette player. Cables, manuals, all excellent $750. INFO-TECH-Universal Electronics N-600 code converter with loop supply + rack mount new $600. Dovetron MPC 1000R Mark II terminal unit solid state display-speed conversion-rack mount etc., one owner $1200. Model 28ASR + 28 reperf with gear shift (pick-up only). Drake TR-7, PS-7, MS-7, 3 filters,2 fans, service manual, dust covers-mint- $1150. Heath 5B221 amp $400. Palomar tuner with noise bridge $150. KBOWY-Bill Loop, 4610 Hwy 2 West, Grand Rapids, MN 55744, 218-328-6198.

CABINET FLOOR MODEL RO-28 $79.50; cabinet floor model SR-28 $99.50; sound supressing floor cabinets for M-28 $49.50 each, have 2. Will soon have M-33 machines after checkout and assurance of full operation. Kleinschmidt M-TT-76 keyboard, reperf and TD complete table model, have 2 $150 each;1 general radio Variac autotransformer M-W5HG3M 30 cycle, voltage adjust metered 0-300 v mounted on panel $99.50; Lamda M-LE LoIFM 1458-1, regulated power supply, metered, voltage controls, voltage regulated, 0-36 volts DC 0-5 amps, current regulated 0-.5 - 5 amps, 0-36 VDC; Lamda regulated power supply model LELG7FM L458-1 voltage controls voltage regulated, 0-28 VDC 0-22 amps current control, 2.2-22 amps 0-18 VDC metered volts & amps; Leeds & Northrup CO, K-3 Universal potentiometer catalog 07553-5. W.F.Harmon, 5628 10th Ave., S. Birmingham, AL 35222.

HAM RADIO MAGAZINE. The no nonsense state-of-the-art technical magazine. Subscribe now and see for yourself. 1 year $19.50 US, Canada and foreign surface $21.50, Europe, Africa and Japan air $28.00. Ham Radio Publishing Group, Greenville, NH 03048.

NEWS-NEWS-NEWS-Amateur Radio's Newspaper "WORLDRADIO". Year subscription $9.00. Send to WORLDRADIO. 2509-F Donner Way, Sacramento, CA 95818.

M-33 RO's (receive only) $110; KSR (keyboard send receive) $125, units are less stands with standard private line electronics (UCC 6) 20 MA loop. All units sold as is but have been fully tested line & local prior to shipment and checked for any major visable wear. Used stands for above and M-32-33 series complete with hardware $15 each, with casters $25 each. Lambda power supplies (like new some are) LMB12 12 volts at 2.5 amps (adj) $15 each. A great bargain for a supply of this grade. Approx. 30 units left. Partial list of 33 & 32 parts (make your mutant complete) *N= New *G/U= Good Used. 182036 copy holder G/U $6.50 ea, N $35. 182965 Chad box G/U $3, N $6. 181420 100wpm OP gears G/U $6, N $16. 181411 motor gears G/U $6, N $15. 181043 paper spindle G/U $1, N $2. 182918 Tape spindle G/U $.50, N $1. 180502 print hammer N $1. 181039 platten knob G/U $.75, N $1.50. 185877 plattens-resurfaced (like new) $16. UCC 8 (drivers) G/U $35. UCC 6 call controls G/U tested $40. 182241 or 181870 motors G/U $25 each (fully tested mounts checked). M-33 & 32 reader power supplies G/U fully tested manual $15, auto $20. Most parts are in stock or avilable please contact us reference your needs. 6 ft. copperweld grounding rods. Nice commercial rods (not many of these left, hurry on this one) $8.50 ea. New CP Clare high speed Mercury relays HGS-5202 $2 ea. Clare 5 level strip printers (wooden box) as is. Appears to be in excellent condition. AS is $25 ea. New dust covers for M-32 &33 ASR, heavy gauge $15 ea. Video recording tape boxed used but good $5 per 7" reel. Top makes 3M-Ampex etc. All items subject to prior sale. New York residents add applicable sales tax. All items FOB BayShore, NY. COD orders are excepted. When enclosing payment with order, please enclose exact amount for items purchased. Shipping costs will be COD. Best (cheapest way) unless otherwise stated in your order. Please reference AD 275P when ordering from this list. Thank you. TRAM TELETYPEWRITER SERVICE 50-0 Corbin Ave,BayShore,NY 11706. Telex 645-890.

TELETYPES-BRAND NEW Model 3300 AN (still in boxes) Compatible for use with Apple computers as printers and other uses too. Call 714-739-2626 ask for Pat or Dennis ($250 each).

CRYPTOGRAPHY ITEMS WANTED. Cipher machines, devices (M-209, Enigma, others), books, manuals, anything related to secret codes and ciphers. Lou Kruh, WB2EZK, 17 Alfred Rd., Merrick, NY 11566. 516-378-0263.

FOR SALE: GOOD CONDITION M14 TD 60 wpm $25, contact John Kell, K9TKE, 6922 Yankeetown Hwy., Newburgh, IN 47630. Phone 812-853-3082.

WANTED: An article written for the RTTY JOURNAL. Could be on contesting (how to keep a record, make the final tabulations and proper entries), good photographs of you with your equipment are always welcome. What latest wrinkle have you discovered about this RTTY hobby of ours?.. Thinking of going on a DXpedition with RTTY gear?? Let us hear about it. Is your area having a Hamvention..with RTTY programs??? How about a short article that could have filled this space???

The Journal will be at Dayton, Chicago, Minneapolis, Spokane, Visalia,

EXCHANGE POINTS TABLE

YOUR zone \ CORRESPONDENT zone	1	2	3	4	5	6	7	8	9	10	11	12	13	14	15	16	17	18	19	20	21	22	23	24	25	26	27	28	29	30	31	32	33	34	35	36	37	38	39	40
1	2	14	10	13	16	18	22	20	25	30	36	37	39	21	22	19	20	17	11	25	29	29	22	22	16	28	25	31	39	35	14	36	25	29	34	39	40	47	44	15
2	14	2	15	9	7	16	16	12	16	23	24	30	30	12	14	16	19	20	19	19	25	31	26	30	28	35	35	40	50	50	25	47	14	21	21	28	33	36	37	6
3	10	15	2	8	11	9	13	14	18	21	28	28	30	26	28	27	29	27	21	32	37	39	32	31	24	37	33	40	43	35	11	32	29	35	35	42	48	50	52	20
4	13	8	8	2	3	8	10	8	12	18	22	25	27	19	21	23	26	26	22	26	33	37	32	34	30	40	38	44	52	44	20	40	21	28	26	33	40	41	44	14
5	15	7	11	3	2	9	9	6	10	17	20	24	25	18	20	22	26	26	24	35	32	38	33	35	31	41	40	45	54	46	22	41	19	27	24	31	38	39	42	13
6	18	16	9	8	9	2	4	7	10	12	19	19	21	27	29	31	34	33	29	34	40	46	40	40	33	46	42	49	47	38	17	32	28	36	30	37	44	43	48	22
7	22	16	13	10	9	4	2	4	6	8	15	15	17	26	29	31	35	36	33	33	40	47	42	44	38	50	46	53	49	40	22	34	26	34	26	33	40	38	44	22
8	20	12	14	8	6	7	4	2	5	11	15	18	19	22	24	27	31	32	30	29	35	42	38	42	37	47	46	51	54	44	24	38	21	30	23	30	38	36	41	13
9	25	16	18	12	10	10	6	5	2	8	10	14	15	23	25	29	33	35	34	29	35	43	41	45	41	50	50	55	52	45	28	38	21	30	20	27	35	32	38	21
10	30	23	21	18	17	12	8	11	8	2	9	7	9	31	33	37	41	43	41	36	42	51	49	52	45	58	52	54	44	37	28	31	28	36	24	29	38	31	38	29
11	36	24	28	22	20	19	15	15	10	9	2	9	7	26	28	33	36	41	43	30	34	42	45	51	52	49	55	49	42	41	37	35	22	29	16	20	28	23	29	27
12	37	30	28	[illegible]	24	19	15	18	14	7	9	2	3	35	37	41	45	49	48	39	42	49	53	58	50	52	52	48	37	33	32	27	31	37	34	27	33	27	33	34
13	39	30	30	27	25	21	17	19	15	9	7	3	2	33	35	40	43	48	49	37	39	46	50	56	53	50	52	46	34	34	35	29	29	34	21	24	30	24	30	34
14	21	12	26	19	18	27	26	22	23	31	26	35	33	2	3	6	10	14	18	7	14	21	19	25	27	27	30	32	42	49	34	55	5	10	15	19	21	26	26	6
15	22	14	28	21	20	29	29	24	25	33	28	37	35	3	2	5	9	13	18	6	11	18	17	23	27	25	29	30	39	47	36	54	6	7	15	18	19	25	24	8
16	19	16	17	23	22	31	31	27	29	37	33	41	40	6	5	2	4	8	13	6	10	15	12	18	22	21	24	26	36	42	33	49	10	9	20	21	21	27	25	9
17	20	19	29	26	26	34	35	31	33	41	36	45	43	10	9	4	2	5	12	7	8	12	8	14	19	17	20	22	32	38	32	45	14	10	22	22	20	27	23	12
18	17	20	27	26	26	33	36	32	35	43	41	49	48	14	13	8	5	2	7	12	12	12	6	11	14	15	16	20	30	35	29	40	13	15	27	28	24	31	27	14
19	11	19	21	22	24	29	33	30	34	41	43	48	49	18	18	13	12	7	2	18	19	16	10	10	9	16	15	20	30	32	21	36	23	21	33	34	30	38	33	16
20	25	19	32	26	35	34	33	29	29	26	30	39	37	7	6	6	7	12	18	2	6	14	14	20	26	21	26	25	34	43	39	49	8	3	15	16	15	22	20	12
21	29	25	37	33	32	40	40	35	35	42	34	42	39	14	11	10	8	12	19	6	2	9	11	17	24	16	21	20	28	37	40	43	14	6	18	16	11	19	15	19
22	29	31	39	37	38	47	46	42	43	51	42	49	46	21	18	15	12	12	16	14	9	2	6	10	18	17	13	11	21	29	36	35	22	14	26	22	15	22	16	24
23	22	26	32	32	33	40	42	38	41	49	45	53	50	19	17	12	8	6	10	14	11	6	2	6	13	8	12	11	24	30	31	37	22	16	29	26	21	28	22	20
24	22	30	31	34	35	40	44	42	45	52	51	58	56	25	23	18	14	11	10	20	17	10	6	2	8	6	6	10	20	24	26	30	28	22	35	33	25	32	25	25
25	16	28	24	10	31	33	38	37	41	45	52	50	53	27	27	22	19	14	9	26	24	18	13	8	2	13	9	15	23	30	18	27	32	28	41	40	33	40	33	25
26	28	35	37	40	41	46	50	47	50	50	49	52	50	27	25	21	17	15	16	21	16	7	8	6	13	2	6	5	16	22	31	29	29	21	33	29	21	27	20	29
27	25	35	33	38	40	42	46	46	50	52	55	52	52	30	29	24	20	16	15	26	21	13	12	6	9	6	2	7	15	18	25	25	34	27	40	35	27	32	26	30
28	31	40	40	44	45	49	53	51	55	54	49	48	46	32	30	26	22	20	20	25	20	11	14	10	15	5	7	2	10	17	31	24	34	25	36	30	22	26	19	34
29	39	50	43	52	54	47	[illegible]	54	52	44	42	37	37	42	39	36	32	30	30	34	28	21	24	20	23	16	15	10	2	9	15	32	42	33	39	31	24	24	20	44
30	35	50	35	44	46	38	40	44	45	37	41	33	34	49	47	42	38	45	32	43	37	29	30	24	30	22	18	17	9	2	24	7	51	42	47	10	33	32	29	48
31	14	25	11	20	22	17	22	24	28	28	37	32	35	34	36	33	32	29	21	39	40	36	31	26	19	31	25	31	15	24	2	22	39	42	46	53	52	56	51	28
32	36	47	32	40	41	32	34	38	38	31	35	27	29	55	54	49	45	40	36	49	43	35	37	30	27	29	25	24	32	7	22	2	57	48	47	42	38	34	33	50
33	25	14	29	21	19	28	26	21	21	28	22	31	29	5	6	10	14	18	23	8	14	22	22	28	32	29	34	34	42	51	39	57	2	9	10	14	18	22	23	10
34	29	21	35	28	27	36	34	30	30	36	29	37	34	10	7	9	10	15	21	3	6	14	16	22	28	21	27	25	33	42	42	18	9	2	13	[illegible]	12	18	16	16
35	34	21	35	26	24	30	26	23	20	24	16	34	21	15	15	20	22	27	33	15	18	26	29	35	41	33	40	36	39	17	46	47	10	13	2	7	15	15	19	20
36	39	28	42	33	31	37	33	30	27	29	20	27	24	19	18	21	22	28	34	16	16	22	26	33	40	29	35	30	31	40	53	42	14	12	7	2	8	8	11	24
37	40	33	48	40	38	44	40	38	35	38	28	33	30	21	19	21	20	24	30	15	11	15	21	25	33	21	27	22	24	33	52	38	18	12	15	8	2	7	5	28
38	47	36	50	41	39	43	38	36	32	31	23	27	24	26	25	27	27	31	38	22	19	22	28	32	40	27	32	26	24	32	56	34	22	18	15	8	7	2	6	32
39	44	37	52	44	42	48	44	41	38	38	29	33	30	26	24	25	23	27	33	20	15	16	22	25	33	20	26	19	20	29	51	33	23	16	19	11	5	6	2	32
40	15	6	20	14	13	22	22	18	21	29	27	34	34	6	8	9	12	14	16	12	19	24	20	25	25	29	30	34	44	48	28	50	10	16	20	24	28	32	32	2

MPC-1000R BY DOVETRON

MULTIPATH CORRECTION, IN-BAND DIVERSITY, SIGNAL REGENERATION, UP-DOWN SPEED CONVERSION, 200 CHARACTER FIFO MEMORY, KEYBOARD-CONTROLLED WORD CORRECTION & DIGITAL AUTOSTART

THE MPC-1000R REGENERATIVE RTTY TERMINAL UNIT

The DOVETRON MPC-1000R is a complete Transmit-Receive modem designed for optimum radio teleprinter communications on land, sea and in the air.

Standard features include a high level loop supply and keyer (neutral or polar), EIA and MIL FSK outputs, a phase-continuous AFSK Tone Keyer with three selectable Mark - Space - Shift tone pairs, Mark, FSK & Digital Autostart, Automatic Markhold, an internal RY Generator for terminal unit Self-Test and circuit adjustment, and a Signal Loss Alarm circuit.

The MPC Series is available in six different models to meet your exact requirements.

Complete specifications are available on your request, or call 213-682-3705.

DOVETRON

627 Fremont Avenue
South Pasadena,
California 91030, U.S.A.

RTTY Journal

SECOND CLASS PERMIT PAID
AT ENCINITAS, CA 92024

PO BOX RY

Cardiff by the Sea, CA. 92007